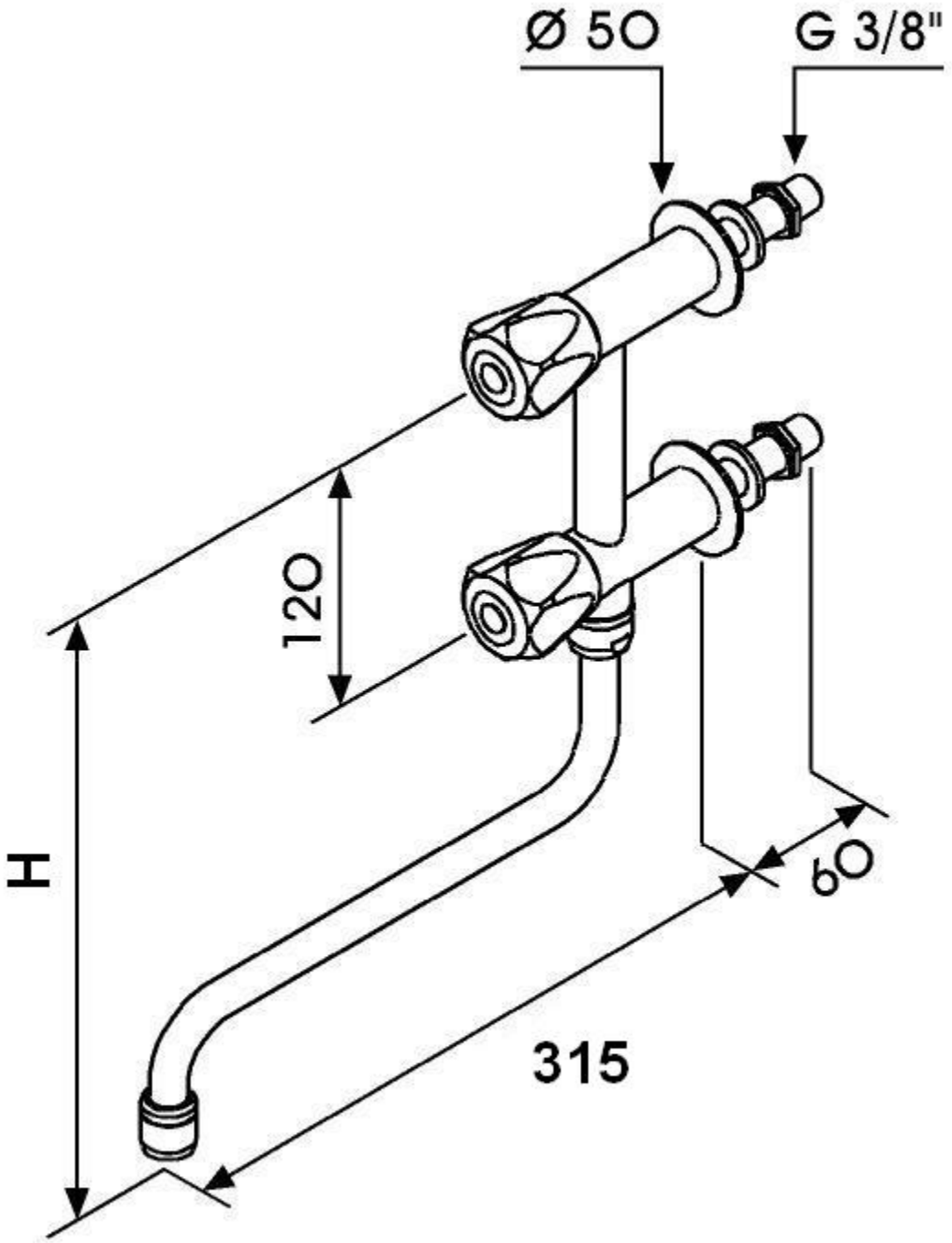
Ø 50
G 3/8"
120
H
60
315